DESIGN

INSTALLATION INSTRUCTION

SINGLE LEVER WASHBASIN MIXER

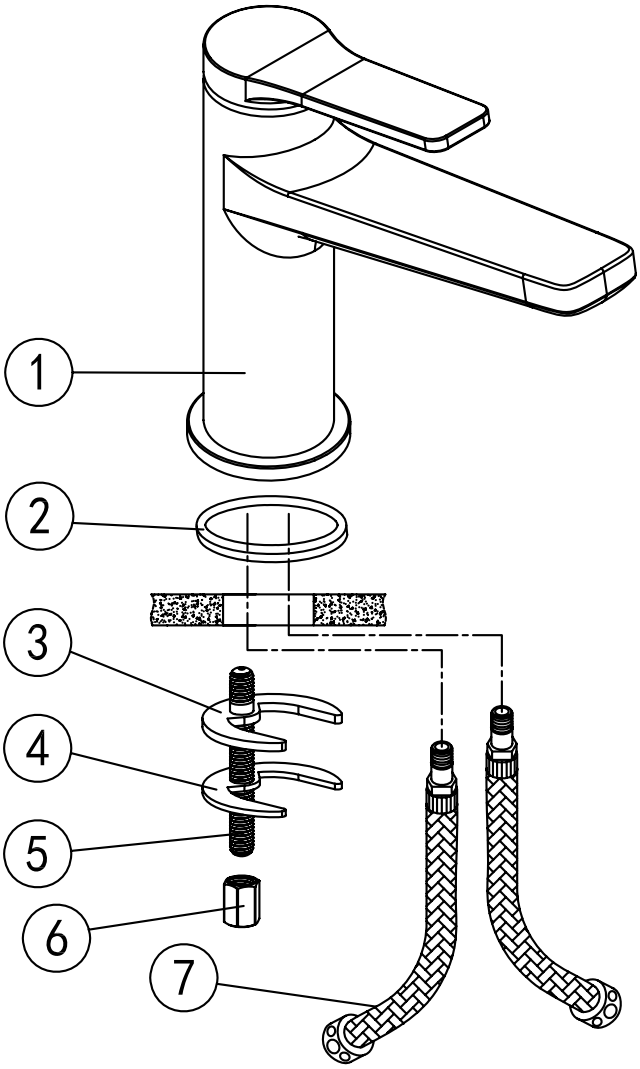

Code	The Accessory List	Quantity
1	Main body	1
2	Wearing ring	1
3	Rubber washer	1
4	Clamp	1
5	Fixing bolt	1
6	Nut	1
7	Inlet pipe	2

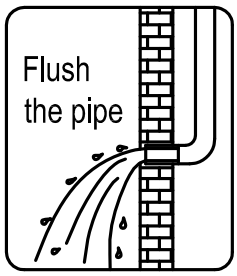

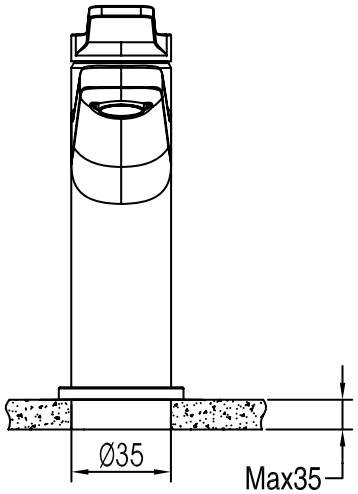
Ø35
Max35

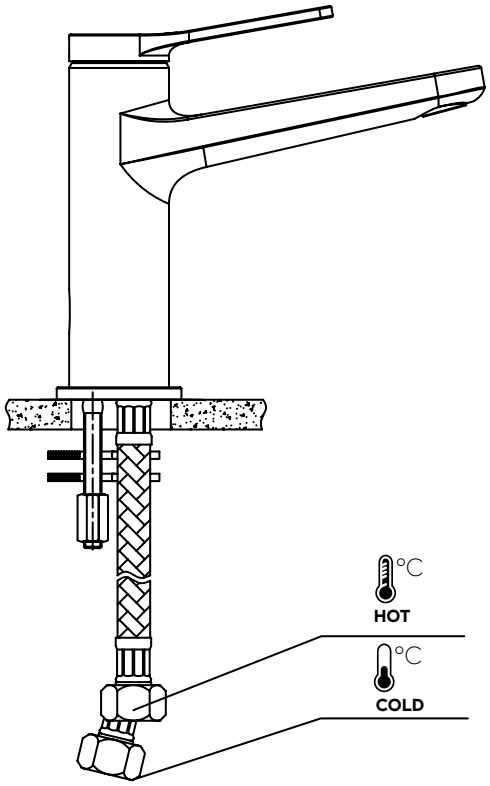
°C
HOT
°C
COLD

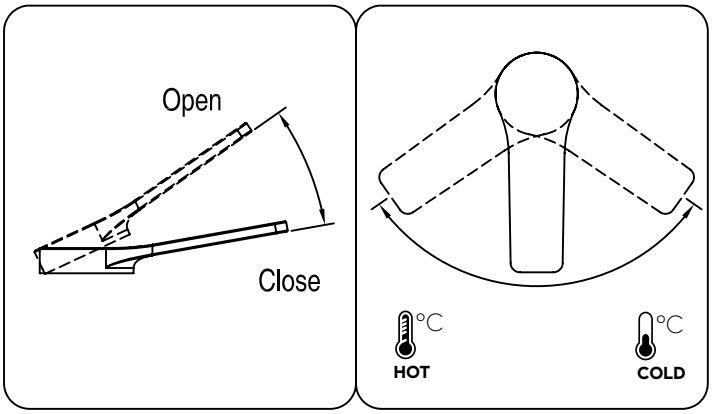
Open
Close
°C
HOT
°C
COLD