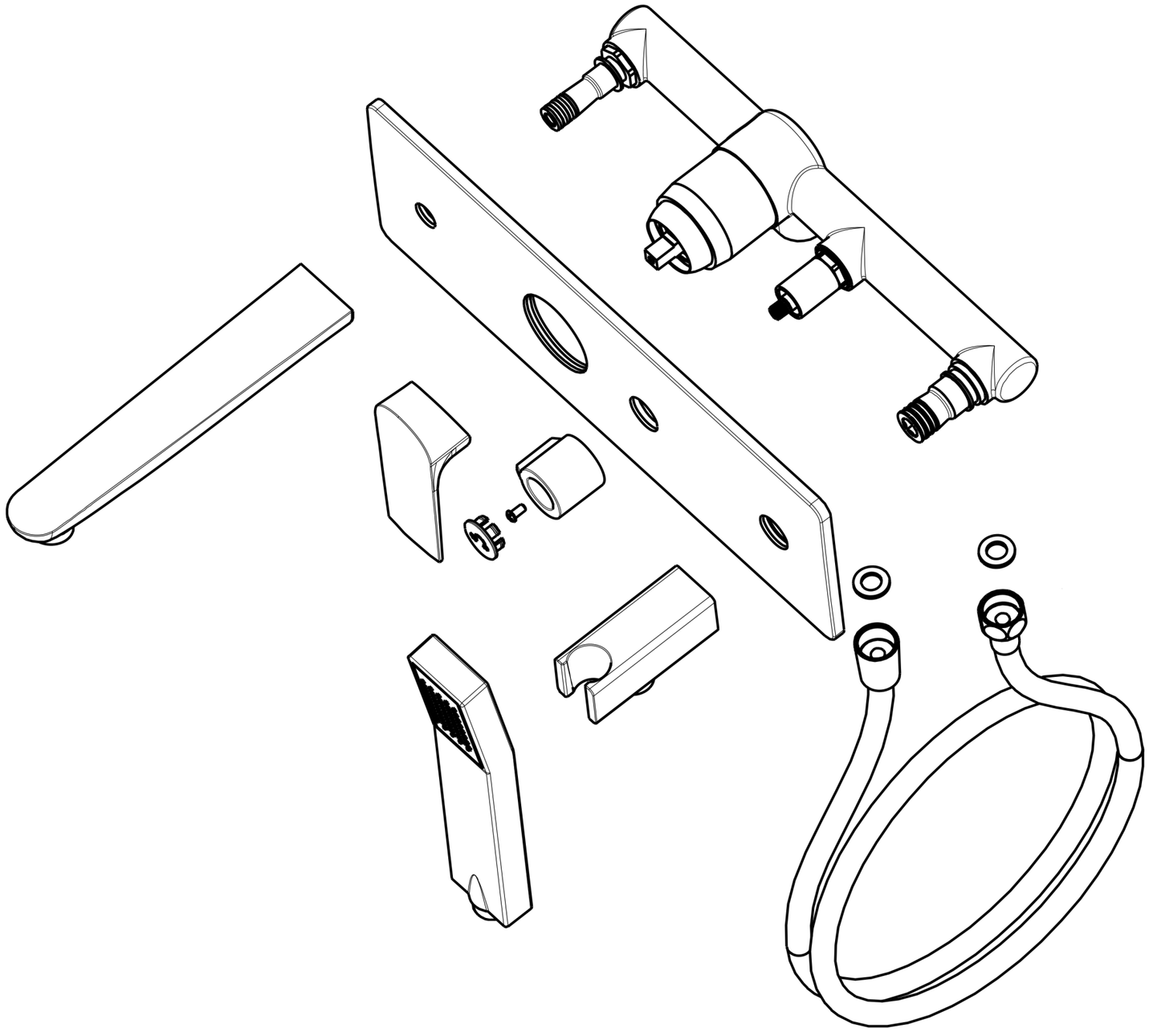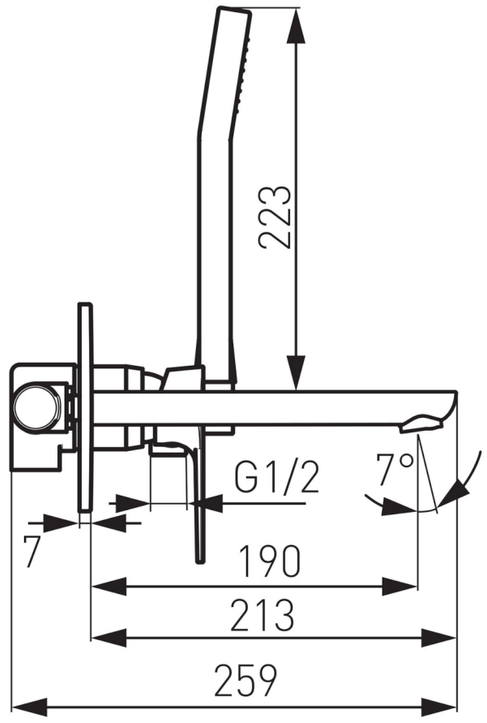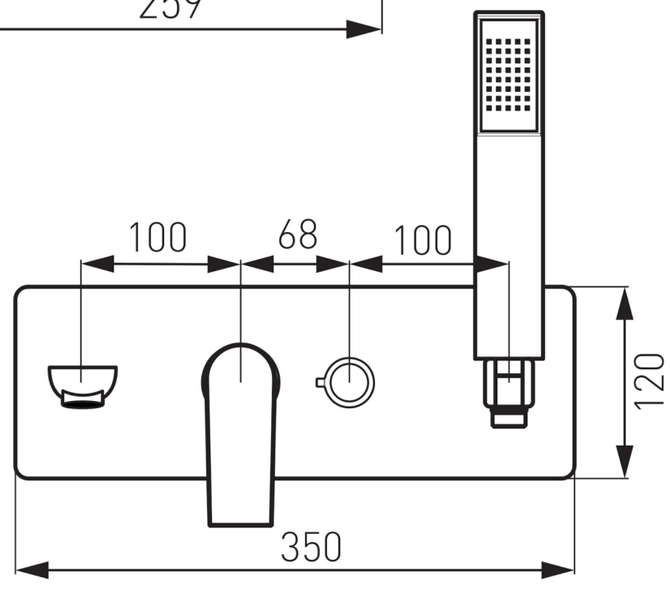DESIGN