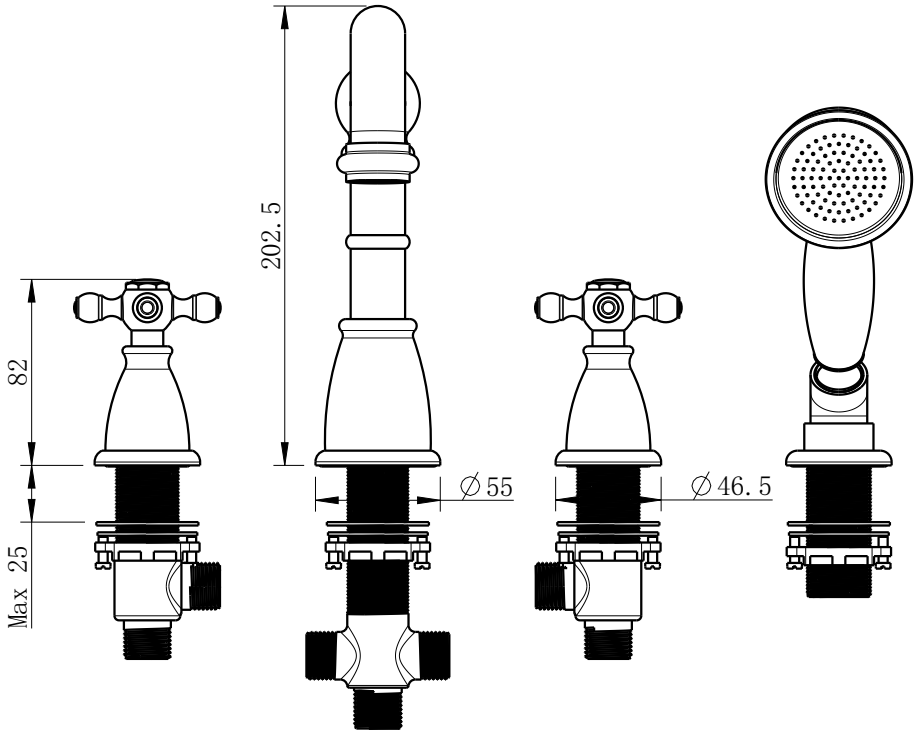
202.5
82
Max 25
∅55
∅46.5

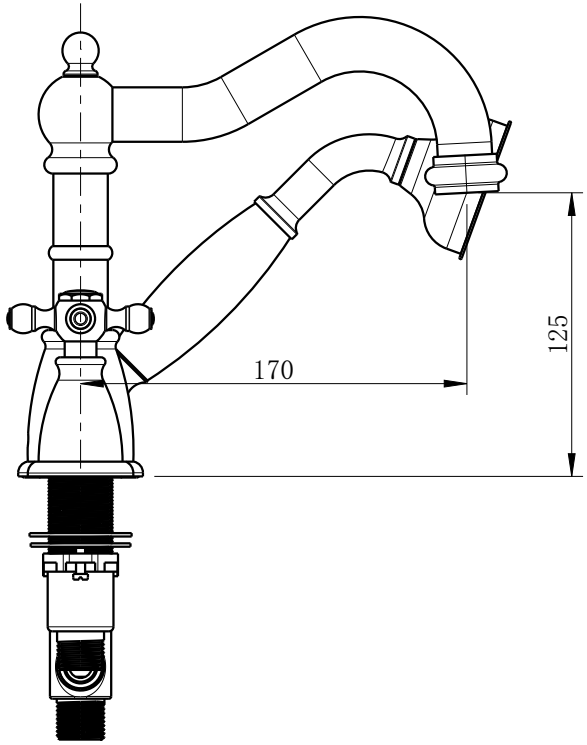
170
125

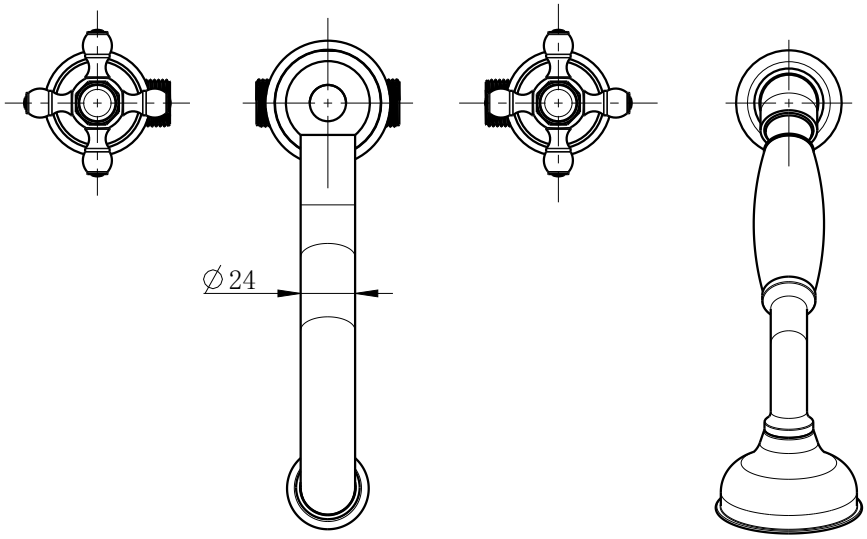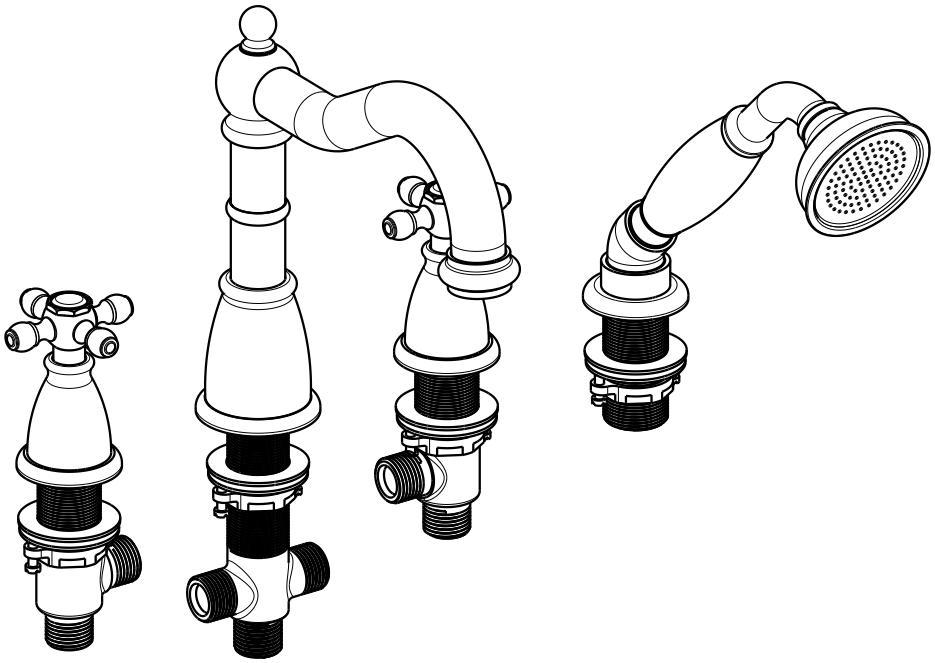
∅24